Because it matters

Contact Us.

Head Office. Ruko Sampoerna Square No. 15
Jl. Raya Hankam, Jatisampurna - Bekasi 17433
Telp. (021) 22813394

Branch Office. Ruko Derwati Mas Estate, No. 31,
Jl. Derwati Raya, Kel. Derwati,
Kec. Rancasari - Bandung 40292

www.mandiriarthasolusi.co.id
info@mandiriarthasolusi.co.id

Mandiri Artha Solusi
@mandiriartha
mandiriartha
Mandiri Artha Solusi

Learn Engagingly and Think Collaboratively

BenQ Interactive Flat Panels for Today's Interactive Classrooms

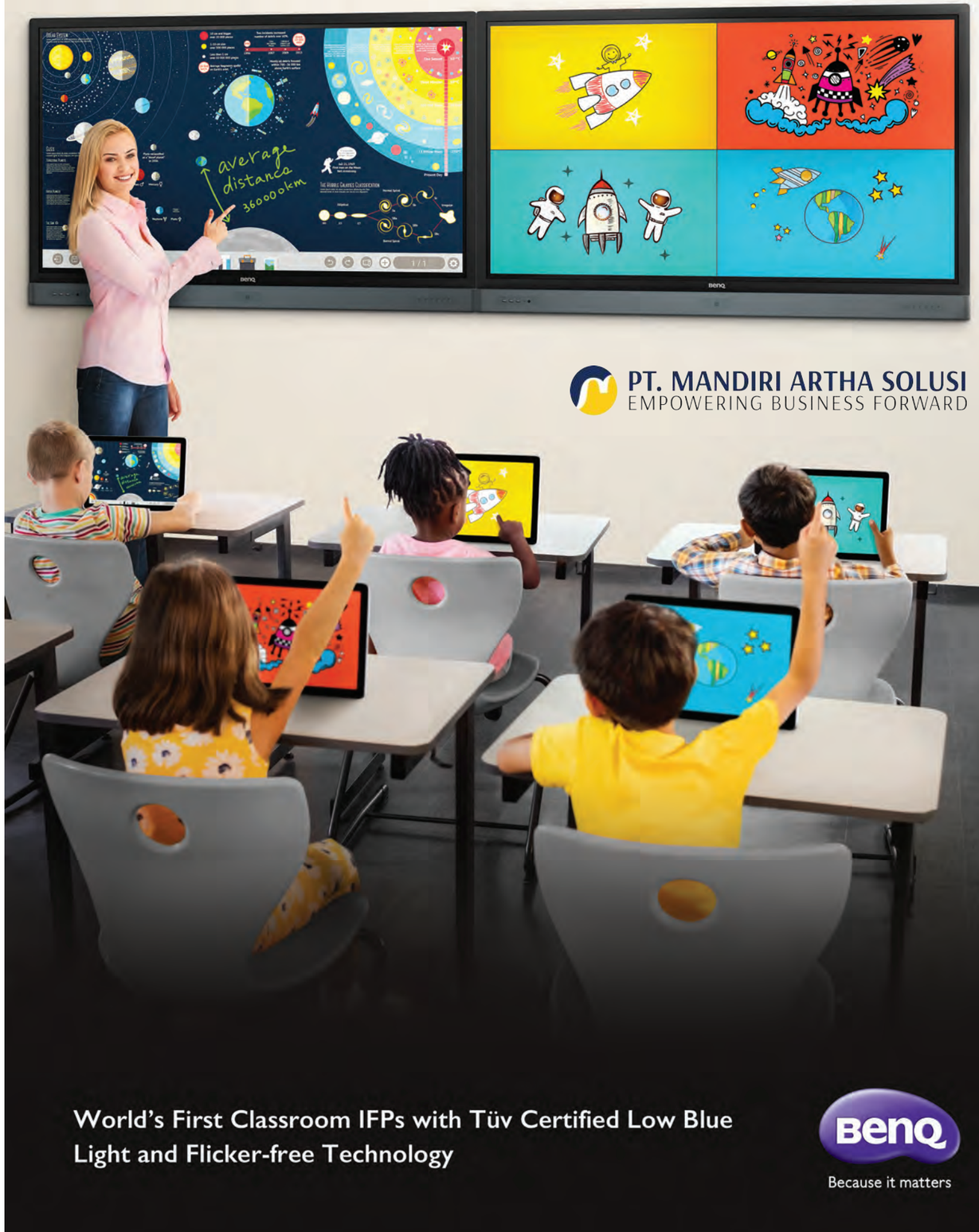

PT. MANDIRI ARTHA SOLUSI
EMPOWERING BUSINESS FORWARD

World's First Classroom IFPs with Tüv Certified Low Blue Light and Flicker-free Technology

Because it matters

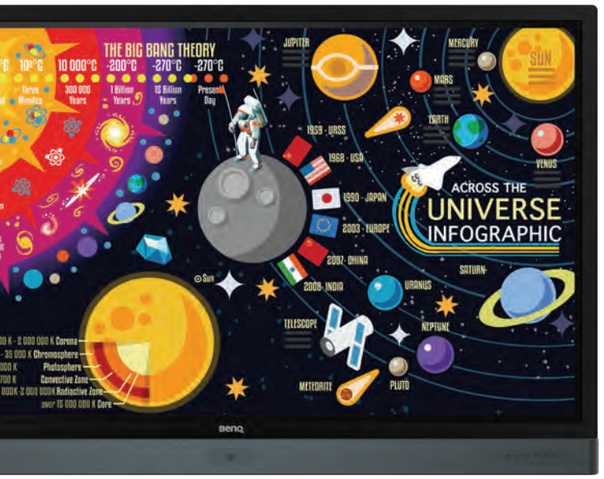

BenQ Education Interactive Flat Panel Display

Your Caring Mate for Enhanced Interactive Learning

BenQ Education Interactive Flat Panel is designed to tap into the dynamic possibilities of the classroom and help teachers build a healthy and engaging learning environment. Not only does it come with the Air Quality Sensor*, Germ-Resistant Screen* and Eye-Care solution, but also installed with proficient cloud whiteboard for enhanced class participation and foster collaboration with students beyond locations and platforms. BenQ Education Interactive Flat Panel is your ultimate interactive display to achieve a touch-enhanced, and connect entire class for a smooth and fun learning experience.

*Only compatible with the RP series.

Annotate and Collaborate Everywhere with the Cloud

With cloud features, EZWrite 5.0 streamlines classroom discussions by making it smoother than ever for teachers and students to share ideas, notes, and opinions as if they are annotating on the same whiteboard regardless of where they are. Furthermore, with AMS service teachers will be able to access teaching materials stored in cloud storage and start the class directly with BenQ's Education IFP.

Smooth Real-Time Collaboration

Cloud Whiteboard and Sticky Notes for Classrooms

Packed with teacher- and student-friendly features, BenQ's EZWrite 5.0 is the leading annotation solution for interactive and collaborative classroom scenarios. Teachers and students can enjoy enhanced interactivity by using EZWrite Cloud Whiteboard to collect, categorize, edit, and share notes between the IFP and mobile devices.

Instant Access to the Cloud

EZWrite 5.0 allows teachers to directly download and upload files to cloud services, such as Google Drive and Dropbox. Exclusive to EZWrite 5.0, this convenient cloud access makes it easy for teachers to modify their materials and bring them everywhere.

* To use this feature, the teacher's personal cloud storage must first be connected to BenQ Account Management System (AMS)

Saving Files with EZWrite 5.0

Step1. Save your file

Step2. Choose your cloud storage

Loading Files with EZWrite 5.0

Step.1 Download a file from your cloud stroage

Step2. Open the file directly in EZWrite 5.0

Flexible Anytime Annotation

Adjustable Screen Capture Regions and Easy Import

With EZWrite 5.0's Floating Tool, teachers can capture screen shots of anything on the screen, including content from apps, websites, and videos from any source. They can then import this content into EZWrite 5.0 for further discussion and annotation on a brand new page.

Step1. Press the Screen Shot button on the Floating Tool

Step2. Capture on-screen content directly on the IFP

Step3. Import to EZWrite 5.0 and make annotations

Dual Pens for Simultaneous Collaboration with Different Colors

EZWrite 5.0 comes with dual pens that allow two users to write or draw simultaneously with different colors, making it ideal for lively classroom activities.

Brush Mode for Creative Education

EZWrite 5.0 is ideal for creative, inspired creation in art classes. Users are guaranteed to enjoy an effortless experience that feels like writing and drawing with actual pens and brushes.

Floating Tool

EZWrite 5.0's built-in Floating Tool empowers teachers to write on top of any app, video, website, document, or image. Whether using Windows, Mac, Chrome, or Android, a teacher can take notes on top of any on-screen content and save them. With screen capture, it allows users to capture all – or just part – of the screen within two fingers at both hands. The Floating Tool also offers a smooth writing experience when used with HDMI, VGA, DP, and other signal sources, ensuring maximum flexibility.

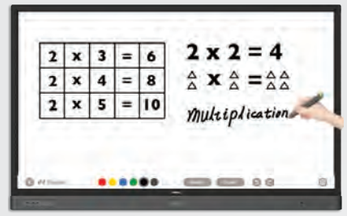

Intelligent Handwriting Recognition

EZWrite 5.0's handwriting recognition feature allows users to instantly convert written text, numbers, forms, and drawings into easily legible digital text without having to switch modes.

Tap and Create

Teachers can directly open EZWrite 5.0 with a simple tap of the IFP's NFC sensor and immediately begin creating vibrant notes with various colored pencils, backgrounds, and palm erasers. This quick and convenient access streamlines teaching flow and helps keep students focused.

Create a Healthy Learning Environment for Students

When it comes to effective learning, health matters. BenQ Education IFP ensures classrooms can embrace innovation without compromising students' health by providing air quality sensor*, smart eye-care technology and germ-resistant screen*.

Air-Quality Sensor*

Bad indoor air quality will decrease the learning efficiency and exposed students at risk of lifelong health problems. BenQ Education IFP incorporates the air-quality sensor* to help monitor CO2 concentration level in classrooms, reminding teachers to adopt necessary mechanisms to keep CO2 concentration at an ideal level. The thoughtful design ensures that students can remain highly concentrated during class while enjoying a much healthier learning environment.

Smart Eye-Care Solution

The Smart Eye-Care solution can function intuitively with the help of the embedded motion sensor. For a smooth and comfortable viewing experience, BenQ Education IFP will automatically activate Flicker-Free and Low Blue Light features by detecting the movement of users close to the screen.

Flicker-Free

Low Blue Light

Anti-Glare

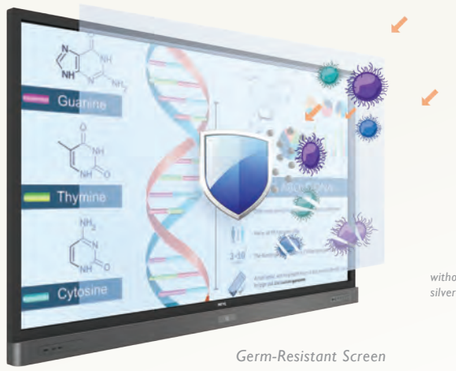

Germ-Resistant Screen

Germ-Resistant Screen*

The Germ-Resistant Screen* is empowered by a multilayer coating of the non-toxic, enduring nano ionic silver agent that kills most germs accumulating on screen surfaces and prevent cross-infection or epidemic in classrooms. The ionic silver's antimicrobial feature remains effective even after thorough cleaning or long periods of use.

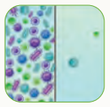

without ionic silver coating

with ionic silver coating

*Only compatible with the RP series.

Facilitate Teaching Flow with Friendly Design

Nurture Uninterrupted Learning with BenQ Launcher

To further ensure uninterrupted learning for students, BenQ Education IFP streamlines the steps for teachers to start classes with BenQ Launcher. Created to aggregate all key tools in one hub, BenQ Launcher allows teachers to start using EZWrite whiteboard as well as accessing to variety input sources in a single tap without logging into their accounts. Teachers can also put announcements on the message board. Additionally, BenQ Launcher comes with a task switcher, letting teachers effortlessly switch between recent apps and input signal sources at fingertips.

Account Management System for Personalized Workspace

BenQ's IFPs support multi-account management through NFC* technology, which allows users to directly access and manage their personal system-setting, network drive and cloud storage space such as Google drive and Dropbox, by simply scanning BenQ designed NFC* cards without having to enter password.

*Only compatible with the RP series.

Wireless Solution for Seamless Collaboration

InstaQShare is the software designed for seamless wireless presentation and collaboration during lectures. It allows the smooth streaming of visual, audio files and Full HD quality videos. Users can also mirror all digital content from devices including PCs, tablets, and smartphones, empowering contributors to enrich their sessions with a variety of multimedia resources.

Hands Free Control over the IFP with Voice Assistant*

BenQ Education IFP offers an extra level of flexibility for device control through Voice Assistant*, allowing teachers to control the flow of the class, such as starting the timer or searching the internet from wherever they are in the classroom. Teachers can easily control the IFP through voice control or remote control, further ensuring a smooth classroom experience for both students and teachers.

Twice the Touch Resolution

BenQ's new education IFPs fine-tune handwriting experience with an advanced fine IR touch that further reduces the gap between actual landing point and the point displayed on the screen. Additionally, the new series also allows teachers to create a more natural handwriting as the new touch frame recognizes a smaller radius. To avoid creating cursive handwriting by accident, the new series reduces the pre-touch distance to offer a better touch and writing experience.

Further reducing the gap between actual landing point and the point displayed on the screen.

Creating a more natural handwriting as the new touch frame recognizes a smaller radius.

Reducing the pre-touch distance to offer a better touch and writing experience.

*Only compatible with the RP series.

Maximize Flexibility in Teaching through Open Sharing

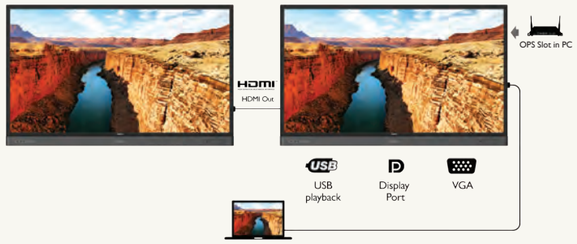

Multiple Display Application for Increased Teaching Efficiency

BenQ Education IFP supports dual display application through HDMI out, allowing teachers to share teaching materials to more than one screen and increase the efficiency of teaching and student engagement.

Multi-Platform Compatibility

The Interactive Flat Panels can work seamlessly with a wide range of computing and mobile devices running most major operating systems, from Windows to Mac, Linux and Chrome, through its plug-and-play feature.

Recommended Apps through "BenQ Suggests"

BenQ Education IFP incorporates several recommended Android apps into BenQ Suggests, also in partnership with solution partners such as Teamviewer and Blizz, which further expand the IFPs' potential by simplifying app updates and downloading in the future.

Hassle-Free Display Management

MDA (Multiple Display Administrator)

Operators can remotely control display on/ off time or backlight via LAN or RS232.

DMS 1.0 (Display Management System)

Install Android™ apps for a selection of displays through BenQ's cloud server.

OTA (Over-the-Air) Update

Keep all display drivers up-to-date with easy firmware update.

RP series specifications

Model Name		RP6501K	RP7501K	RP8601K
Panel	Screen Size	65"	75"	86"
	Backlight / Lightsource	DLED	DLED	DLED
	Resolution (Pixels)	UHD 3840x2160 pixels	UHD 3840x2160 pixels	UHD 3840x2160 pixels
	Brightness (Typical)	450 nits	350 nits	400 nits
	Contrast Ratio (Typical)	1,200:1	1,200:1	1,200:1
	Viewing Angle (Horizontal/Vertical)	178°/178°	178°/178°	178°/178°
	Response Time (ms)	6ms	8ms	8ms
	Panel Bit	10 bit	10 bit	10 bit
	Light Life (Typical)	30,000 hours	30,000 hours	30,000 hours
Power	Voltage	100V-240V, 50/60Hz	100V-240V, 50/60Hz	100V-240V, 50/60Hz
	Typical (Watt)	130W	239W	268W
Touch	Touch Technology	IR Touch	IR Touch	IR Touch
	Numbers of Touch	Up to 20 Point Multi-touch	Up to 20 Point Multi-touch	Up to 20 Point Multi-touch
	Resolution (Points Area Function)	32,767 x 32,767	32,767 x 32,767	32,767 x 32,767
	Touch Interface	x2 (USB type B)	x2 (USB type B)	x2 (USB type B)
	OS Supported	Win 7,Win 8/8.1,Win 10 / Mac OS X10.11~10.12 /Chrome OS 58 / Ubuntu 16.04 / Fedora 28 / OpenSuse 15 / Android kernel version 3.10 or above	Win 7,Win 8/8.1,Win 10 / Mac OS X10.11~10.12 /Chrome OS 58 / Ubuntu 16.04 / Fedora 28 / OpenSuse 15 / Android kernel version 3.10 or above	Win 7,Win 8/8.1,Win 10 / Mac OS X10.11~10.12 /Chrome OS 58 / Ubuntu 16.04 / Fedora 28 / OpenSuse 15 / Android kernel version 3.10 or above
Glass	Tempered Glass	4mm, Tempered Glass	4mm, Tempered Glass	4mm, Tempered Glass
	Anti-Glare (AG) Coating	Yes	Yes	Yes
	Germ-Resistant Screen	Yes	Yes	Yes
Audio	Internal Speaker	16Wx2	16Wx2	16Wx2
	Internal Microphone	x4	x4	x4
	PC Audio	x1	x1	x1
	MIC (3.5mm)	x1	x1	x1
Connectivity	Power (AC) Input	x1	x1	x1
	Power Switch	x1	x1	x1
	VGA Input	x1	x1	x1
	HDMI Input	x3 (2.0 x 3)	x3 (2.0 x 3)	x3 (2.0 x 3)
	HDMI Output	x1	x1	x1
	Display Port	x1	x1	x1
	OPS Slot	x1	x1	x1
	USB Player (Photo, Video)	x6 (2.0x5, 3.0x1)	x6 (2.0x5, 3.0x1)	x6 (2.0x5, 3.0x1)
Control	RS232 Input	x1	x1	x1
	RJ45 Port	x1	x1	x1
	Firmware Update	USB/OTA	USB/OTA	USB/OTA
Mechanical	Weight (Without / With Packing) (kg)	50.0 Kg / 62.0 Kg	84.5 Kg / 97.0 Kg	85.5 Kg / 98.0 Kg
	Dimension (WxHxD) (mm)	1521.1 x 967.1 x 136.1 mm	1747.4 x 1095.9 x 133.9 mm	2000.6 x 1241.6 x 141.9 mm
	Wall Mounting (VESA) (mm)	4 holes (500 x 400mm) Screw M6 x 14mm	4 holes (600 x 400mm) Screw M8 x 25mm	4 holes (700 x 400mm) Screw M8 x 25mm
	Handle	x2	x2	x4
	Pen Tray	x1	x1	x1
RF	NFC Reader / Writer	x1	x1	x1
OSD	On-Screen Display Languages	EN/FR/DE/NL/PL/RU/CZ/DN/SW/IT/RO/FI/NO/ GR/HU/ES/PT/TC/SC/AB/JP/TH/PERS/VIE/KR (25 Languages)	EN/FR/DE/NL/PL/RU/CZ/DN/SW/IT/RO/FI/NO/ GR/HU/ES/PT/TC/SC/AB/JP/TH/PERS/VIE/KR (25 Languages)	EN/FR/DE/NL/PL/RU/CZ/DN/SW/IT/RO/FI/NO/ GR/HU/ES/PT/TC/SC/AB/JP/TH/PERS/VIE/KR (25 Languages)
Package / Accessory	Remote Controller	x1	x1	x1
	Power Cord (By Region)	x7 (EU, UK, US, AU, TW, JP, IN)	x7 (EU, UK, US, AU, TW, JP, IN)	x7 (EU, UK, US, AU, TW, JP, IN)
	Audio Cable	N/A	N/A	N/A
	VGA Cable	x1 (1.5m)	x1 (1.5m)	x1 (1.5m)
	HDMI Cable	x1 (1.5m)	x1 (1.5m)	x1 (1.5m)
	Quick Start Guide	x1	x1	x1
	User's Manual Electronic File	x1	x1	x1
	USB Cable for Touch	x1 (3m)	x1 (3m)	x1 (3m)
	Touch Pen (Stylus)	x2	x2	x2
	Software License Card	x1	x1	x1

Environment Notice
*LightSource life results will vary depending on environmental conditions and usage. Actual product's features and specifications are subject to change without notice.
*All related Optical Value is measure by Standard Lens.
* The Contrast is measure by Full On Full Off standard.

RM series specifications

Model Name		RM5501K	RM6501K	RM7501K	RM8601K
Panel	Screen Size	55"	65"	75"	86"
	Backlight / Lightsource	DLED	DLED	DLED	DLED
	Resolution (Pixels)	UHD 3840x2160 pixels	UHD 3840x2160 pixels	UHD 3840x2160 pixels	UHD 3840x2160 pixels
	Brightness (Typical)	350	400	350	400
	Contrast Ratio (Typical)	1,200:1	1,200:1	1,200:1	1,200:1
	Viewing Angle (Horizontal/ Vertical)	178°/178°	178°/178°	178°/178°	178°/178°
	Response Time (ms)	9ms	6ms	8ms	8ms
	Panel Bit	10 bit	10 bit	10 bit	10 bit
	Light Life (Typical)	30,000 hours	30,000 hours	30,000 hours	30,000 hours
Power	Voltage	100V-240V, 50/60Hz	100V-240V, 50/60Hz	100V-240V, 50/60Hz	100V-240V, 50/60Hz
	Typical (Watt)	98W	119W	322W	350W
Touch	Touch Technology	IR Touch	IR Touch	IR Touch	IR Touch
	Numbers of Touch	Up to 20 Point Multi-touch	Up to 20 Point Multi-touch	Up to 20 Point Multi-touch	Up to 20 Point Multi-touch
	Resolution (Points Area Function)	32,767 x 32,767	32,767 x 32,767	32,767 x 32,767	32,767 x 32,767
	Touch Interface	x1 (USB type B)	x1 (USB type B)	x1 (USB type B)	x1 (USB type B)
	OS Supported	Win 7, Win 8/8.1, Win 10 / Mac OS X10.11~10.12 / Chrome OS 58 / Ubuntu 16.04 / Fedora 28 / OpenSuse 15 / Android kernel version 3.10 or above	Win 7, Win 8/8.1, Win 10 / Mac OS X10.11~10.12 / Chrome OS 58 / Ubuntu 16.04 / Fedora 28 / OpenSuse 15 / Android kernel version 3.10 or above	Win 7, Win 8/8.1, Win 10 / Mac OS X10.11~10.12 / Chrome OS 58 / Ubuntu 16.04 / Fedora 28 / OpenSuse 15 / Android kernel version 3.10 or above	Win 7, Win 8/8.1, Win 10 / Mac OS X10.11~10.12 / Chrome OS 58 / Ubuntu 16.04 / Fedora 28 / OpenSuse 15 / Android kernel version 3.10 or above
Glass	Tempered Glass	4mm, Tempered Glass	4mm, Tempered Glass	4mm, Tempered Glass	4mm, Tempered Glass
	Anti-Glare (AG) Coating	Yes	Yes	Yes	Yes
	Germ-Resistant Screen	N/A	N/A	N/A	N/A
Audio	Internal Speaker	20Wx2	20Wx2	20Wx2	20Wx2
	Internal Microphone	N/A	N/A	N/A	N/A
	PC Audio	x1	x1	x1	x1
	MIC (3.5mm)	x1	x1	x1	x1
Connectivity	Power (AC) Input	x1	x1	x1	x1
	Power Switch	x1	x1	x1	x1
	VGA Input	x1	x1	x1	x1
	HDMI Input	x4 (2.0x4)	x4 (2.0x4)	x4 (2.0x4)	x4 (2.0x4)
	HDMI Output	x1	x1	x1	x1
	Display Port	N/A	N/A	N/A	N/A
	OPS Slot	x1	x1	x1	x1
	USB Player (Photo, Video)	x4 (2.0x2, 3.0x2)	x4 (2.0x2, 3.0x2)	x4 (2.0x2, 3.0x2)	x4 (2.0x2, 3.0x2)
Control	RS232 Input	x1	x1	x1	x1
	RJ45 Port	x1	x1	x1	x1
	Firmware Update	USB/OTA	USB/OTA	USB/OTA	USB/OTA
Mechanical	Weight (Without / With Packing) (kg)	44.4 Kg / 54.0 Kg	49.8 Kg / 62.5 kg	65.0 Kg / 76.2Kg	90.4 Kg / 103.2 Kg
	Dimension (WxHxD) (mm)	1301.6 x 842.9 x 130.2 mm	1510.5 x 956.5 x 136.0 mm	1736.8 x 1085.3 x 137.1 mm	1990.0 x 1231.0 x 140.9 mm
	Wall Mounting (VESA) (mm)	4 holes (300 × 300mm) Screw M6 x 25mm	4 holes (500 × 400mm) Screw M6 x 13mm	4 holes (600 x 400mm) Screw M8 x 20mm	4 holes (700 x 400mm) Screw M8 x 25mm
	Handle	No	x2	x2	x4
	Pen Tray	x1	x1	x1	x1
RF	NFC Reader / Writer	N/A	N/A	N/A	N/A
OSD	On-Screen Display Languages	EN/FR/DE/NL/PL/RU/CZ/DN/SW/IT/ RO/FI/NO/GR/HU/ES/PT/TC/SC/AB/JP/ TH/PERS/VIE/KR (25 Languages)	EN/FR/DE/NL/PL/RU/CZ/DN/SW/IT/ RO/FI/NO/GR/HU/ES/PT/TC/SC/AB/JP/ TH/PERS/VIE/KR (25 Languages)	EN/FR/DE/NL/PL/RU/CZ/DN/SW/IT/ RO/FI/NO/GR/HU/ES/PT/TC/SC/AB/JP/ TH/PERS/VIE/KR (25 Languages)	EN/FR/DE/NL/PL/RU/CZ/DN/SW/IT/ RO/FI/NO/GR/HU/ES/PT/TC/SC/AB/JP/ TH/PERS/VIE/KR (25 Languages)
Package / Accessory	Remote Controller	x1	x1	x1	x1
	Power Cord (By Region)	x7 (EU, UK, US, AU, TW, JP, IN)	x7 (EU, UK, US, AU, TW, JP, IN)	x7 (EU, UK, US, AU, TW, JP, IN)	x7 (EU, UK, US, AU, TW, JP, IN)
	Audio Cable	N/A	N/A	N/A	N/A
	VGA Cable	x1 (1.5m)	x1 (1.5m)	x1 (1.5m)	x1 (1.5m)
	HDMI Cable	x1 (1.5m)	x1 (1.5m)	x1 (1.5m)	x1 (1.5m)
	Quick Start Guide	x1	x1	x1	x1
	User's Manual Electronic File	x1	x1	x1	x1
	USB Cable for Touch	x1 (3m)	x1 (3m)	x1 (3m)	x1 (3m)
	Touch Pen (Stylus)	x2	x2	x2	x2
	Software License Card	x1	x1	x1	x1

Environment Notice
*LightSource life results will vary depending on environmental conditions and usage. Actual product's features and specifications are subject to change without notice.
*All related Optical Value is measure by Standard Lens.
* The Contrast is measure by Full On Full Off standard.

Dimension

RP6501K

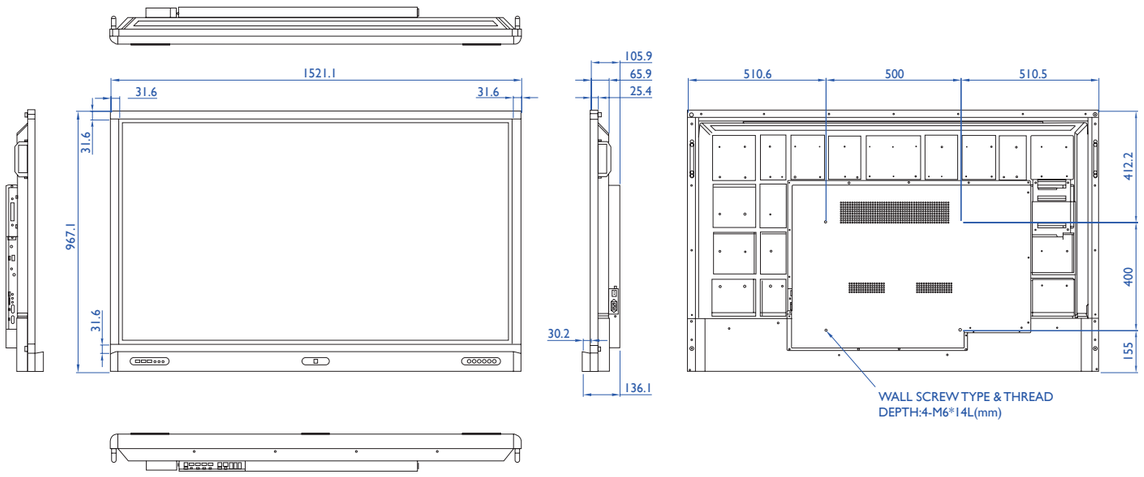

RP7501K

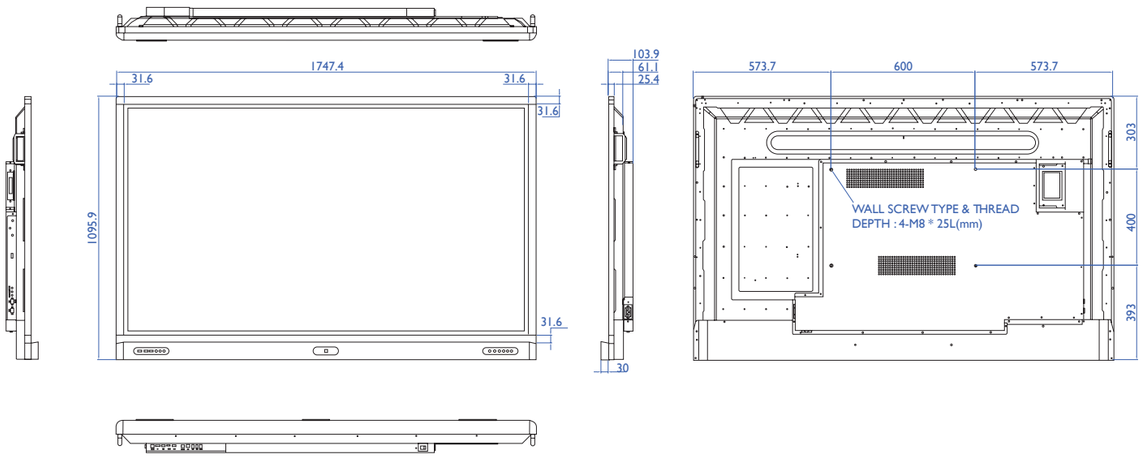

RP8601K

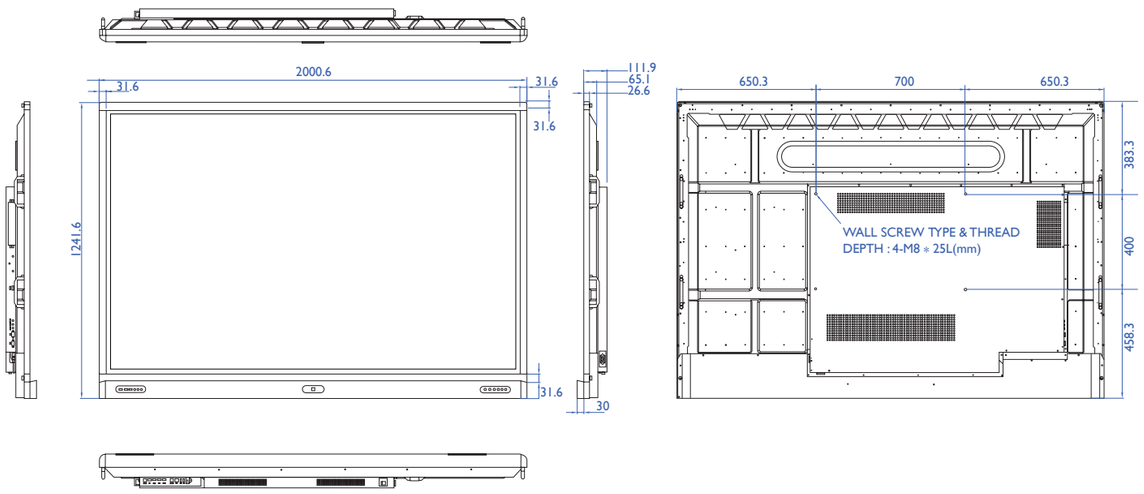

RM5501K

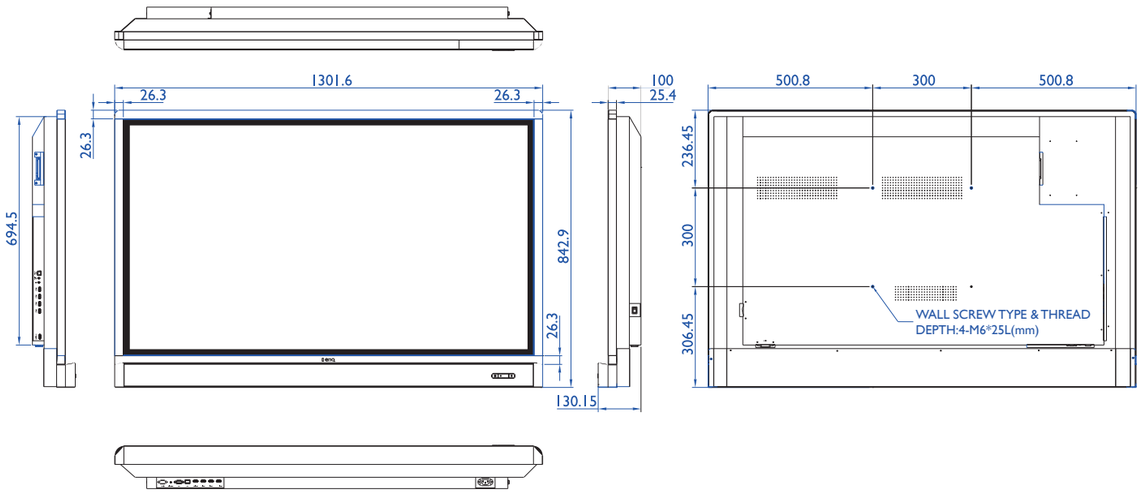

RM6501K

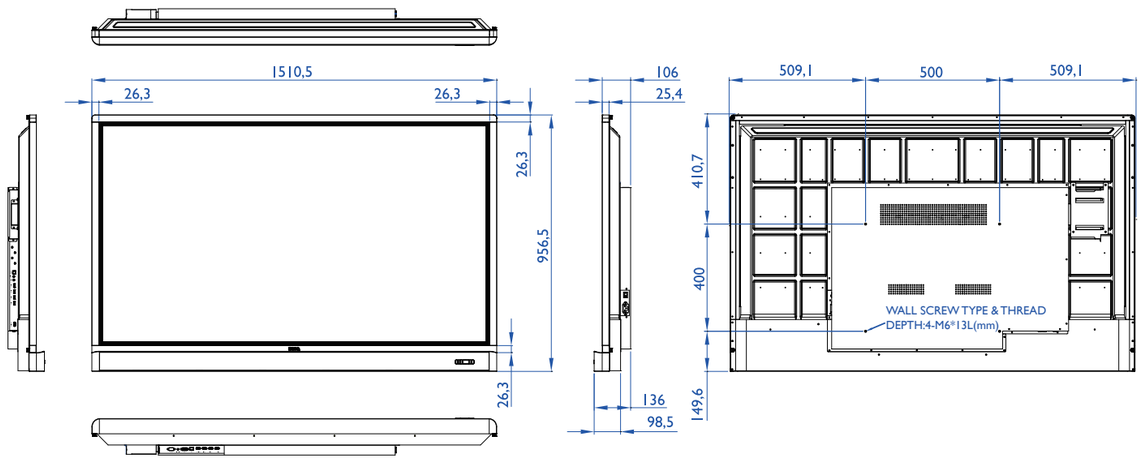

RM7501K

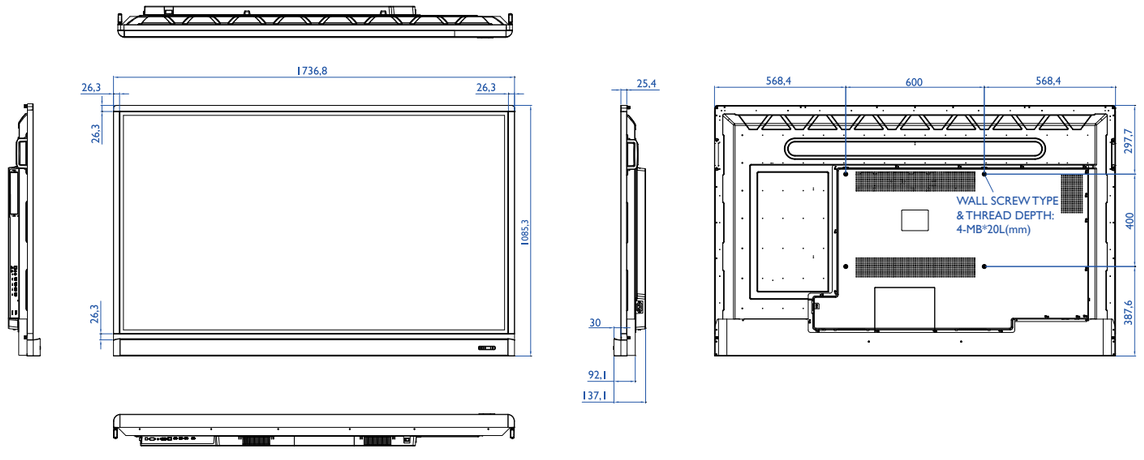

RM8601K

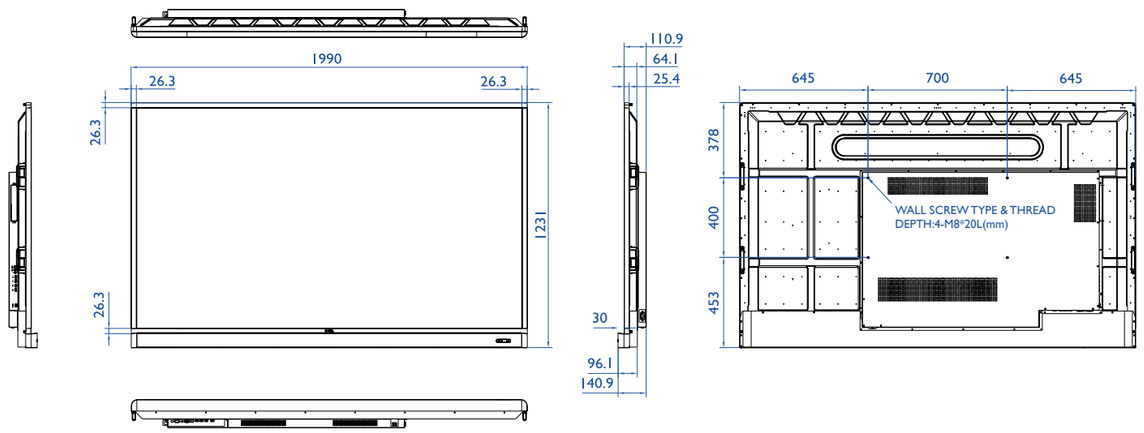

Input/output terminals

RP SERIES

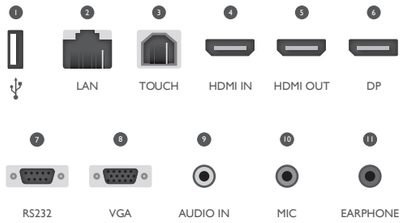

1. USB 2.0 X 3
   Connect USB devices such as USB keyboards, USB mice, and USB flash drives
2. LAN
   LAN interface, connecting RJ45 terminals.This network port is only used for the closed Android OS on this product.
3. TOUCH X 2
   External computer touch signal input.
4. HDMI IN X 3
   High-definition multimedia interface signal input. Connect to PC with an HDMI output, a set-top-box, or other video devices capable of realizing touch functions.
5. HDMI OUT
   Connect to the display devices with an HDMI input.
6. DP
   Connect a video source to a display device.
7. RS232
   Serial interface, used for mutual transfer of data between devices
8. VGA
   Receive analog RGB signals from an external device (such as a computer).
9. AUDIO IN
   Receive audio signals from an external device.
10. MIC
    Connect to a microphone.
11. EARPHONE
    Connect to a earphone.

RM series

1. USB 3.0 X 2
   Connect USB devices such as USB keyboards, USB mice, and USB flash drives
2. USB 2.0 X 2
   Connect USB devices such as USB keyboards, USB mice, and USB flash drives
3. LAN
   LAN interface, connecting RJ45 terminals.This network port is only used for the closed Android OS on this product.
4. TOUCH
   External computer touch signal input.
5. HDMI IN X 3
   High-definition multimedia interface signal input. Connect to PC with an HDMI output, a set-top-box, or other video devices capable of realizing touch functions.
6. HDMI IN (MHL) (2.0)
   High-definition multimedia interface signal input. Connect to PC with an HDMI output, a set-top-box, or other video devices capable of realizing touch functions.
7. HDMI OUT
   Connect to the display devices with an HDMI input.
8. RS232
   Serial interface, used for mutual transfer of data between devices
9. VGA
   Receive analog RGB signals from an external device (such as a computer).
10. AUDIO IN
    Receive audio signals from an external device.
11. MIC
    Connect to a microphone.
12. AUDIO OUT
    Connect to a earphone.